SPARE PARTS LIST - KE 640 Vario 200-230V 50/60Hz

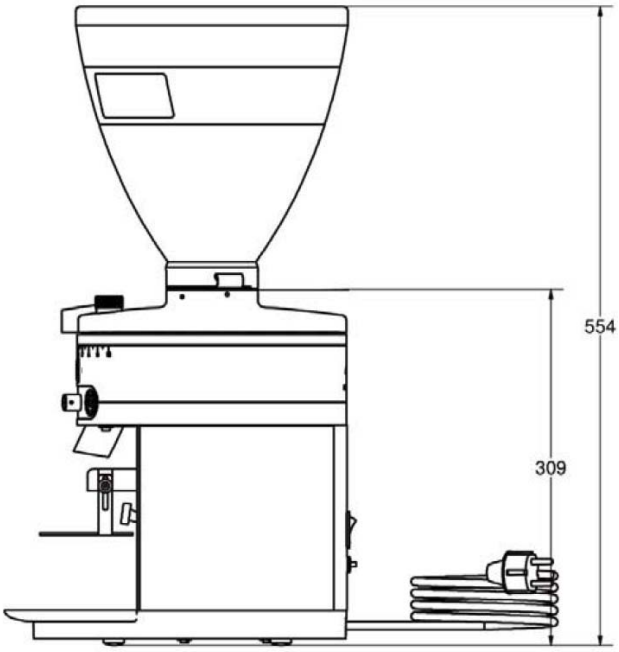

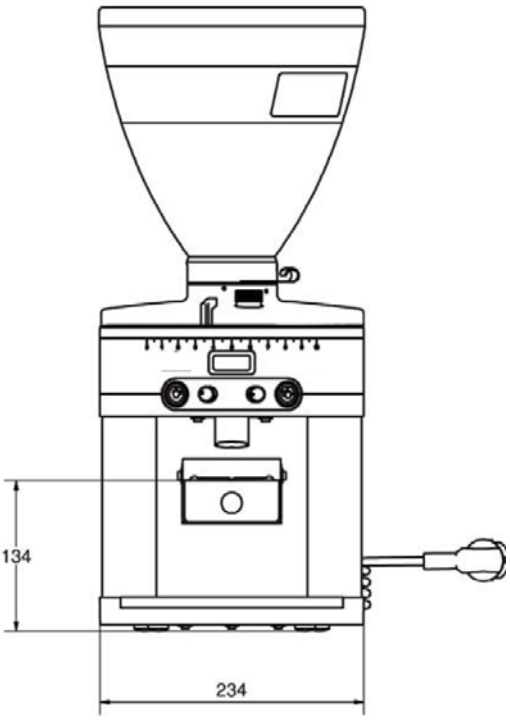

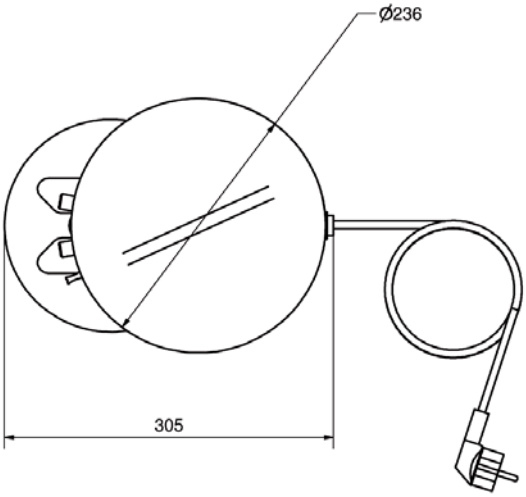

Valid from 1st August 2013
Supersedes all previously issued spare parts lists

Subject to change without prior notice.

SPARE PARTS LIST - KE 640 Vario 200-230V 50/60Hz

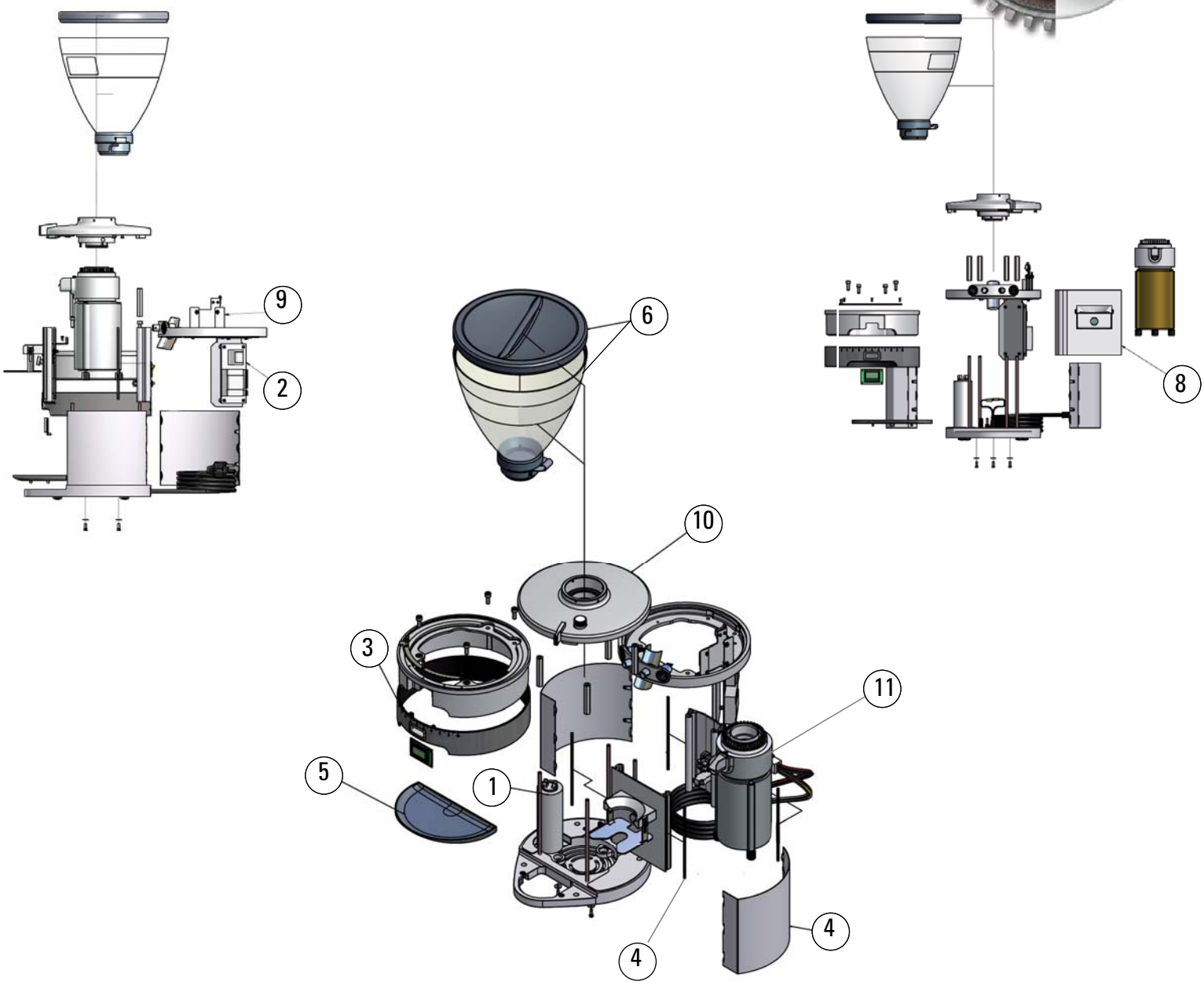

Model: KE 640 Vario 200-230V 50/60Hz

ARTICLE NO.	DRAWING NO.	DESCRIPTION
242765	1	Running capacitor 10µF (200-230V / 50Hz)
243174	2	Power board KE 640 Vario 200-240V, 1,5VA service pack
230604	3	Deco ring silver (Ditting) with lens (other colours on request)
243246	4	Side panel KE 640 RAL 9005 matt black fine structured, flat, service pack (until ser.no. 523784)
	4	Side panel KE 640 RAL 9005 matt black fine structured, round, service pack (from ser.no. 823785)
242362	5	Residue tray
220302	6	Hopper complete with lid (Ditting)
220358	(6)	Hopper complete with lid (without logo)
230608	8	Front plate compl. (angular cutout)
243173	9	Processor board UL/CE, service pack
230885	10	Cover with grind adjustment KE 640 Vario complete
-	11	EK11 built-in grinder 200-230V see page 4 & 5-6

SPARE PARTS LIST - KE 640 Vario 200-230V 50/60Hz

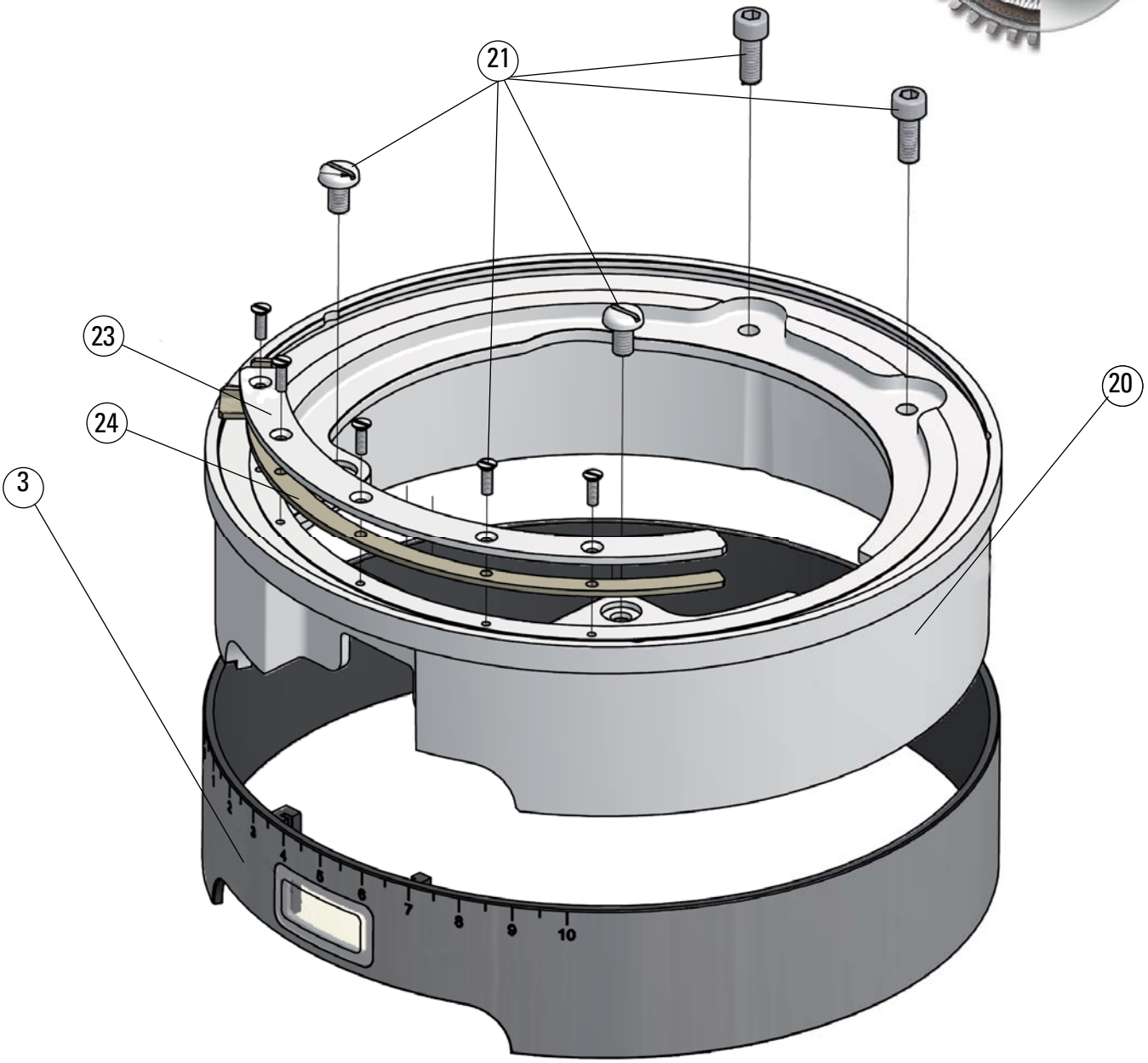

Model: KE 640 Vario 200-230V 50/60Hz

ARTICLE NO.	DRAWING NO.	DESCRIPTION
230604	3	Deco ring silver Ditting complete with lens
242546	20	Intermediate ring coated silver metallic
243501	21	Small parts set, clamp ring / intermediate ring KE 640 Vario
243502	23	Clamp bar KE 640 Vario
243503	24	Distance bar KE 640 Vario

SPARE PARTS LIST - KE 640 Vario 200-230V 50/60Hz

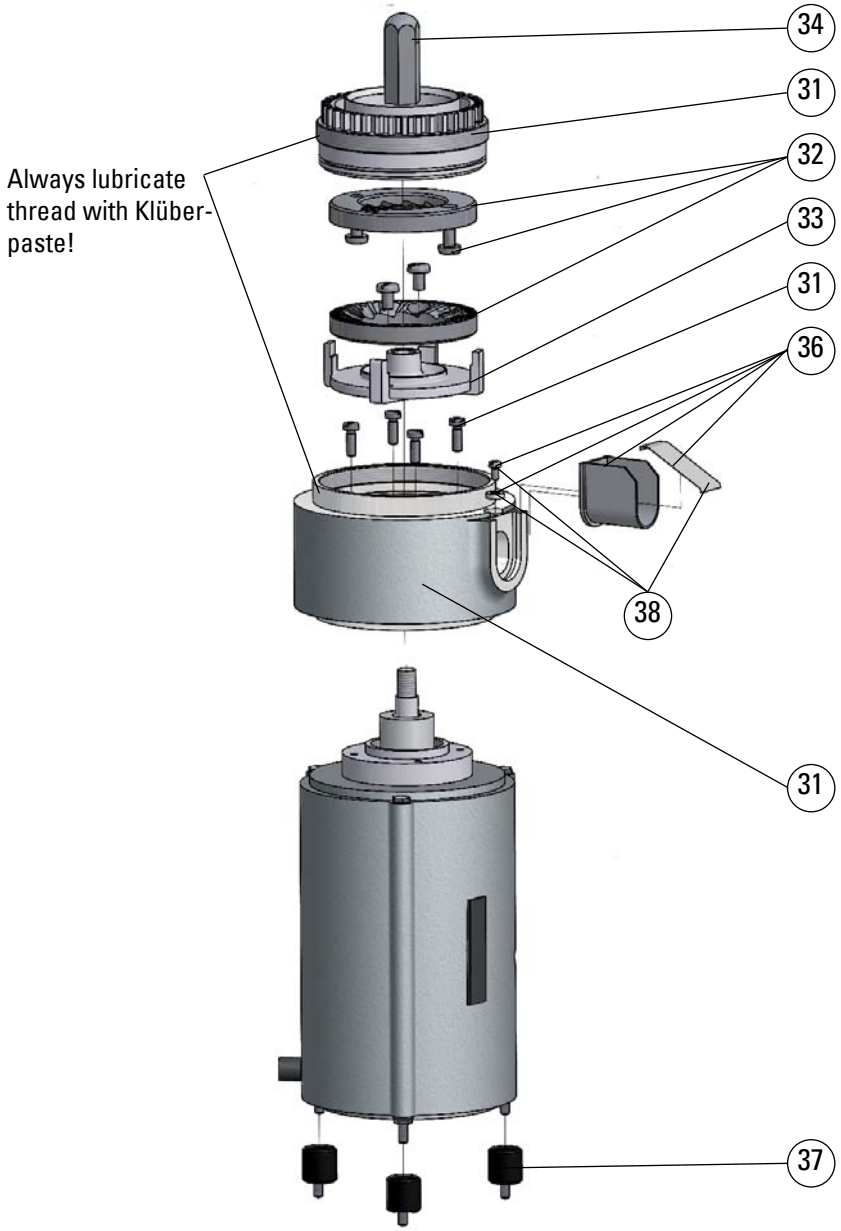

! EK11a: aluminium thread and flat spring spout. Valid until serial number 3331 !

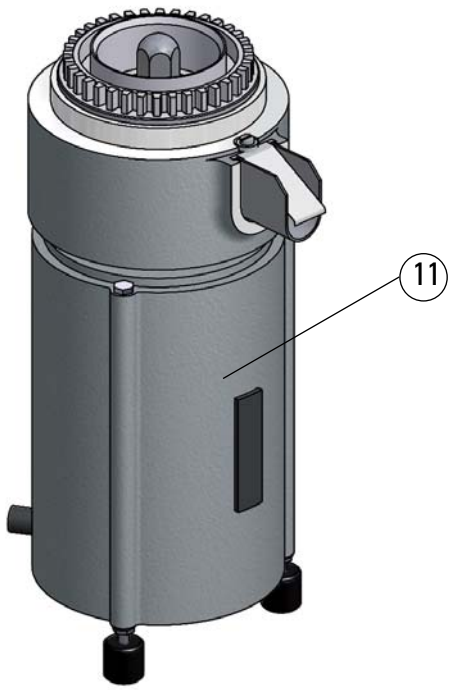

Model: KE 640 Vario 200-230V 50/60Hz

ARTICLE NO.	DRAWING NO.	DESCRIPTION
230616	11	EK11a built-in grinder 200-230V (C0212.00) KE640 flat spring spout (until ser.no. 3331)
243308	31	Grinder casing set EK11a, service pack
275123	32	Grinding disc set 65mm, KE640
242544	33	Grinding disc carrier rotary
242377	34	Finger Protection 40mm
243309	36	Spout EK11a, service pack
242542	37	Shock absorber EK11 15x15mm
243548	38	Flat spring EK11a, Service Pack (pack of 5)
243183	--	Klüberpaste lubricant tube of 60 gr

SPARE PARTS LIST - KE 640 Vario 200-230V 50/60Hz

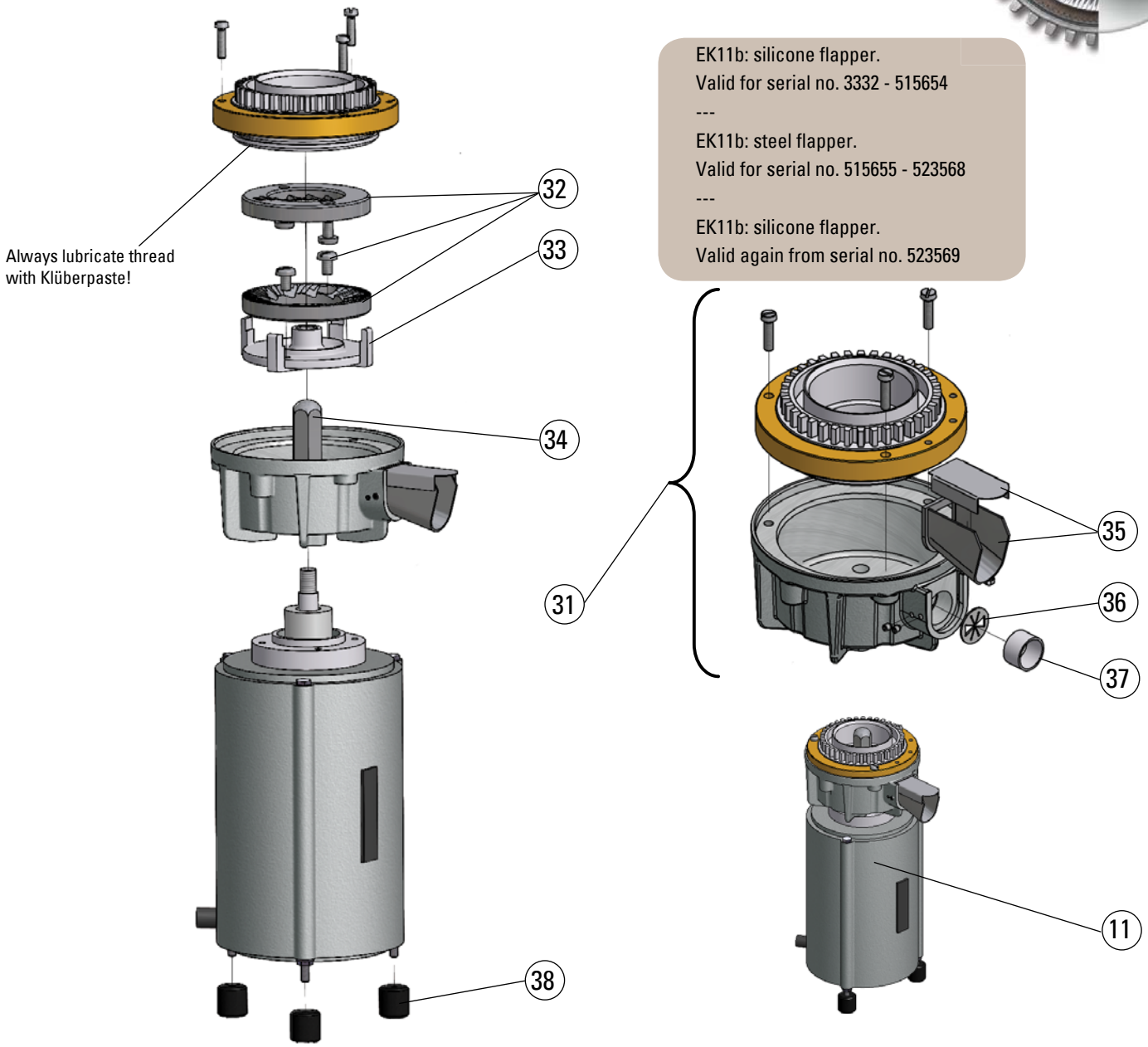

EK11b: silicone flapper.
Valid for serial no. 3332 - 515654

EK11b: steel flapper.
Valid for serial no. 515655 - 523568

EK11b: silicone flapper.
Valid again from serial no. 523569

Model: KE 640 Vario 200-230V 50/60Hz

ARTICLE NO.	DRAWING NO.	DESCRIPTION
101147	11	EK11b built-in grinder 200-230V (C0212.00) KE640 silicone flapper (from ser.no. 3332)
267606	11	EK11b built-in grinder 200-230V (C0212.00) KE640 steel flapper (only ser.nos. 515655 - 523568)
101145	31	Grinder casing set EK11b, silicon flapper, brass thread
243555	31	Grinder casing set EK11b, steel flapper, brass thread (only ser.nos. 515655 - 523568)
275123	32	Grinding disc set 65mm, KE640
242544	33	Grinding disc carrier rotary
242377	34	Finger Protection 40mm
243557	35	Spout EK11b covered

SPARE PARTS LIST - KE 640 Vario 200-230V 50/60Hz

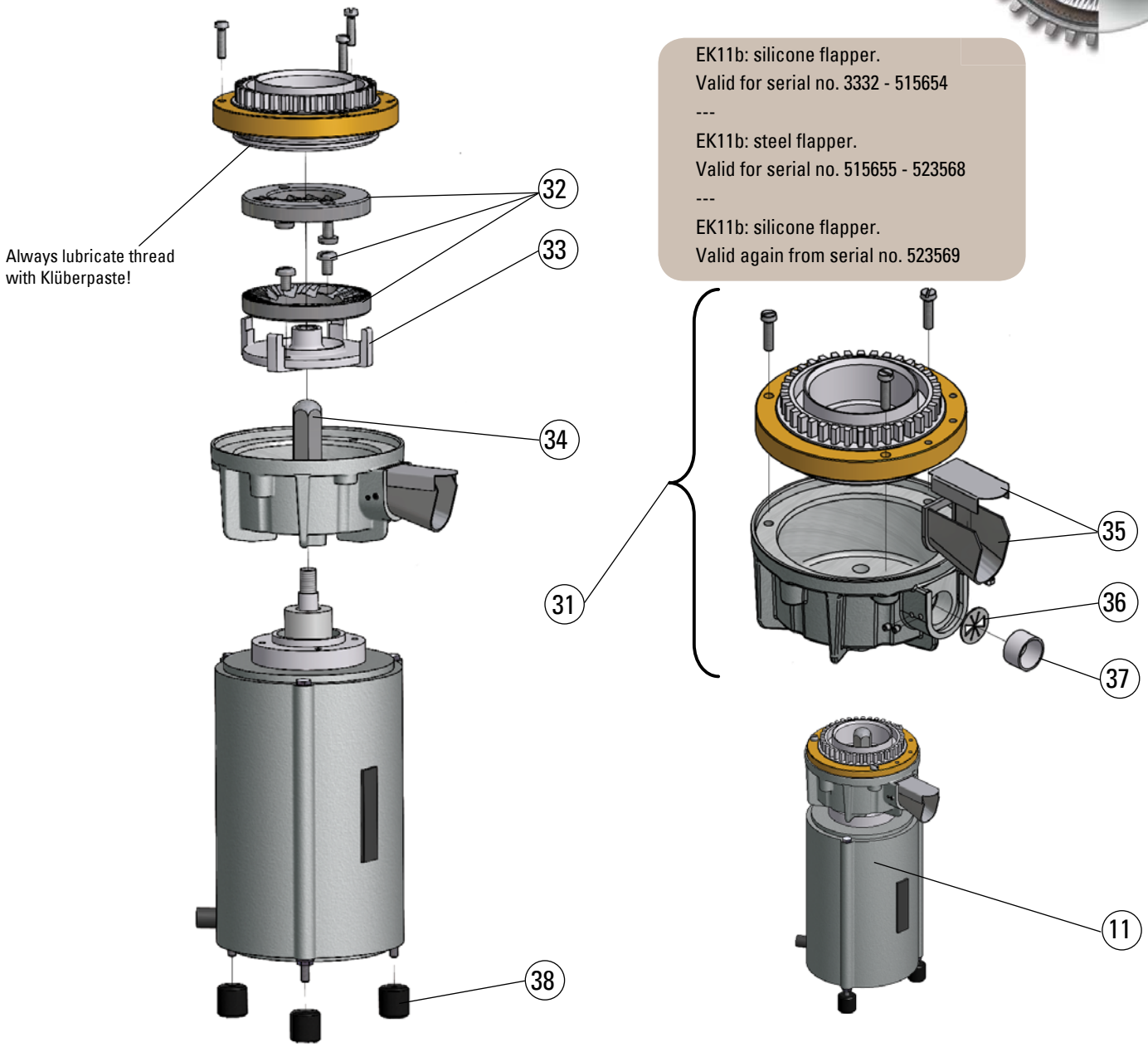

EK11b: silicone flapper.
Valid for serial no. 3332 - 515654

EK11b: steel flapper.
Valid for serial no. 515655 - 523568

EK11b: silicone flapper.
Valid again from serial no. 523569

Model: KE 640 Vario 200-230V 50/60Hz

ARTICLE NO.	DRAWING NO.	DESCRIPTION
243558	36	Silicone flapper Ø17mm
100584	36	Steel flapper Ø15,8mm (ser.no. 515655-523568 only)
101518	36	Silicone flapper Ø15,8mm (exchange for steel flapper only! Serial.no. 515655-523568 only)
243559	37	Spout Tube EK11b
242542	38	Shock absorber EK11 15x15mm
243183	--	Klüberpaste lubricant tube of 60 gr

SPARE PARTS LIST - KE 640 Vario 200-230V 50/60Hz

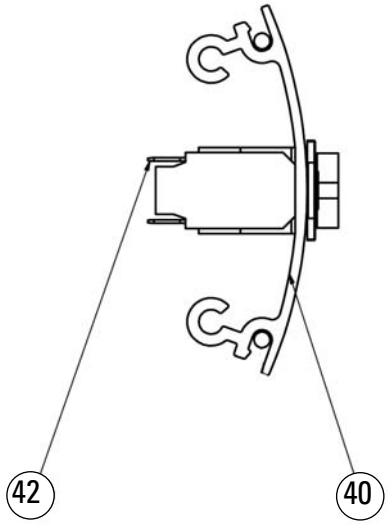

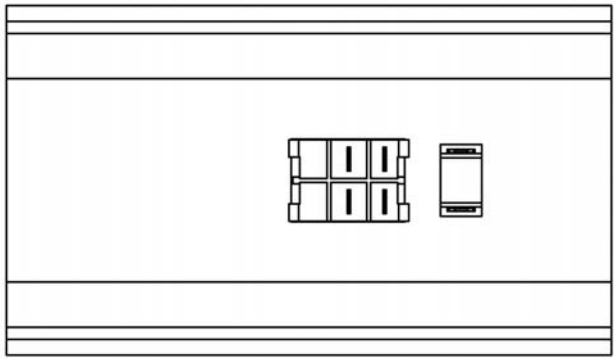

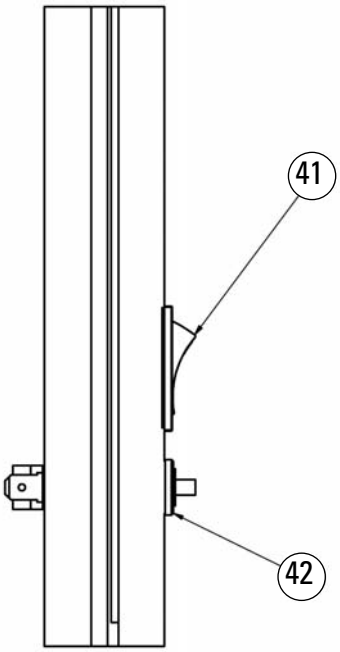

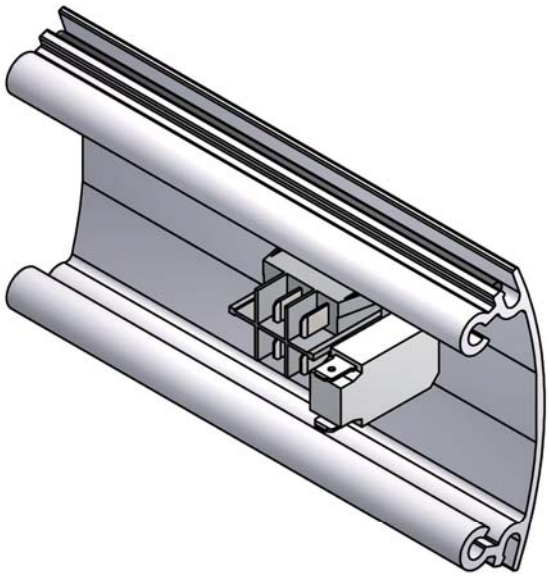

Model: KE 640 Vario 200-230V 50/60Hz

ARTICLE NO.	DRAWING NO.	DESCRIPTION
242510	40	Back panel KE 640 coated
242506	41	Rocker switch
243249	42	Circuit breaker CBE-4A, service pack

SPARE PARTS LIST - KE 640 Vario 200-230V 50/60Hz

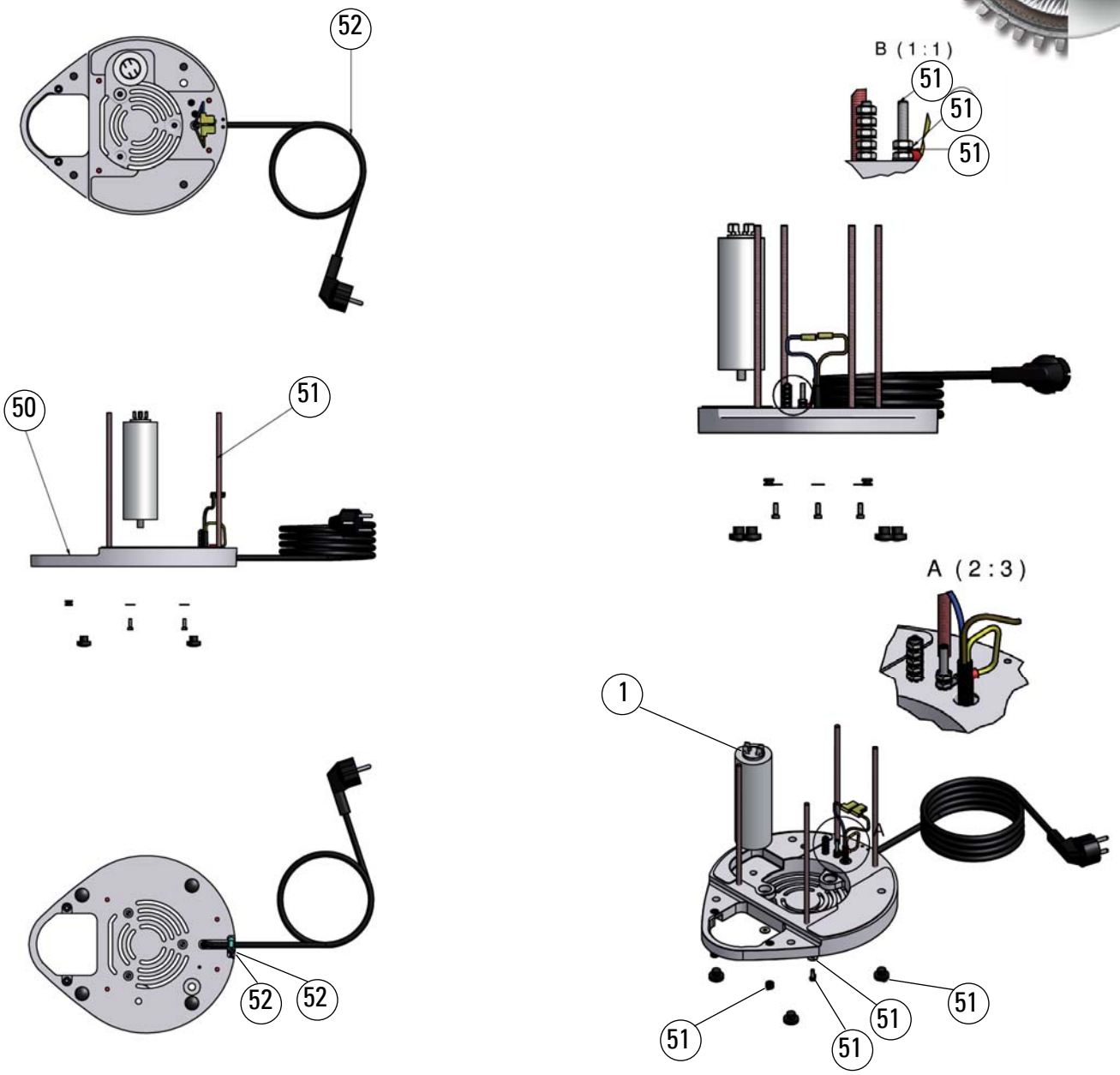

Model: KE 640 Vario 200-230V 50/60Hz

ARTICLE NO.	DRAWING NO.	DESCRIPTION
242765	1	Running capacitor 10µF (200-230V / 50Hz)
242524	50	Base plate KE 640 machined and coated (until ser.no. 523784)
243171	51	Small parts set, base plate KE 640
243250	52	Power cord KE 640 230V CE with strain relief clamp, service pack

SPARE PARTS LIST - KE 640 Vario 200-230V 50/60Hz

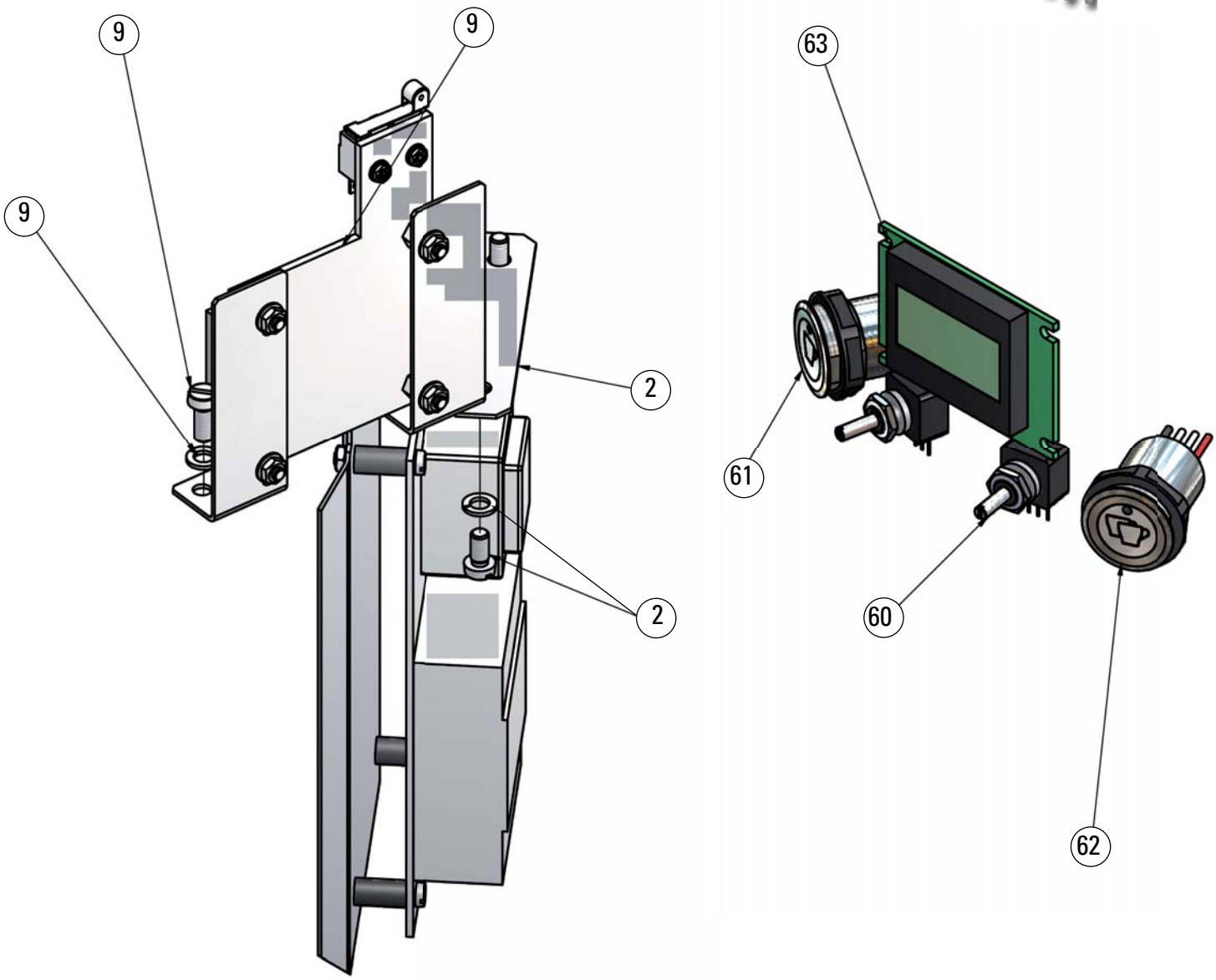

Model: KE 640 Vario 200-230V 50/60Hz

ARTICLE NO.	DRAWING NO.	DESCRIPTION
243173	9	Processor board UL/CE timer with counter, service pack
243174	2	Power board KE 640 200-240V, 1,5VA, service pack
243223	60	Potentiometer 5kOhm from serial number 12414 (short cable)
242533	61	Push button “single shot”
242534	62	Push button “double shot”
242554	63	Display KE 640

SPARE PARTS LIST - KE 640 Vario 200-230V 50/60Hz

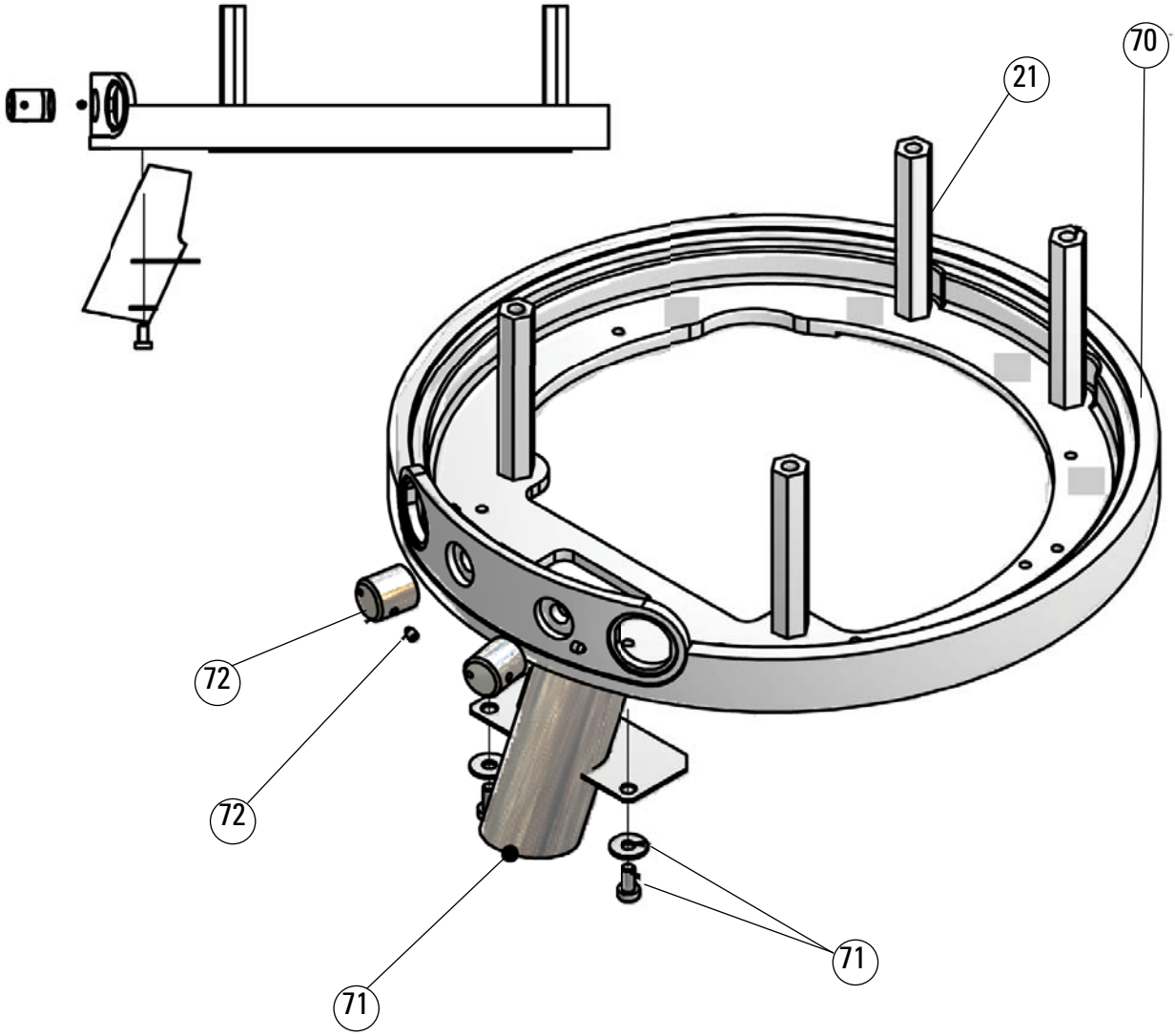

Model: KE 640 Vario 200-230V 50/60Hz

ARTICLE NO.	DRAWING NO.	DESCRIPTION
243501	21	Small parts set, clamp ring / intermediate ring KE 640 Vario
242536	70	Clamp ring KE640 machined and coated (until ser.no. 523784)
243404	71	Spout KE 640 , service pack
242530	72	Adjusting knob for potentiometer, service pack

SPARE PARTS LIST - KE 640 Vario 200-230V 50/60Hz

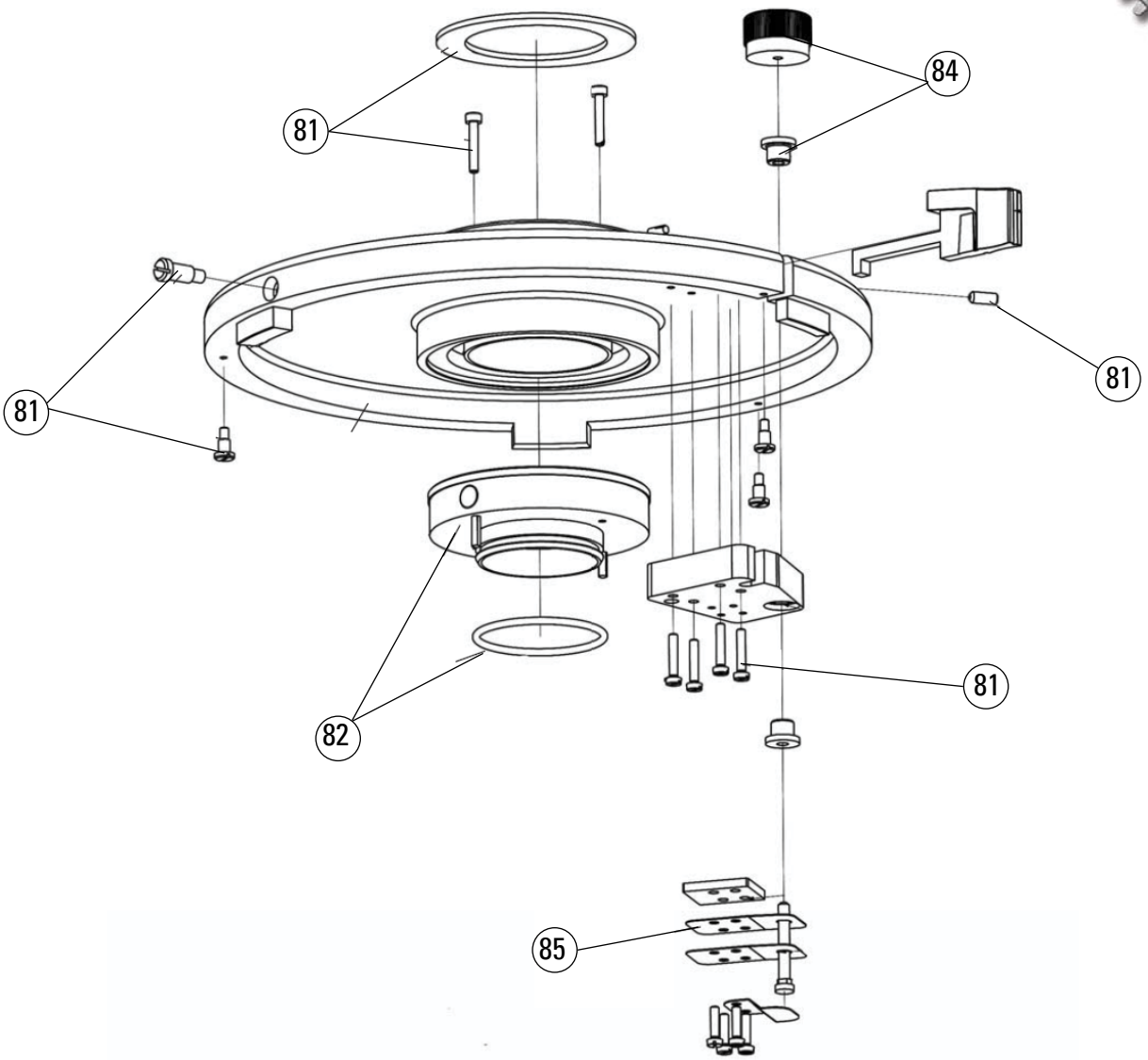

Model: KE 640 Vario 200-230V 50/60Hz

ARTICLE NO.	DRAWING NO.	DESCRIPTION
243175	81	Small parts set, grind adjustment cover KE 640 Vario
242580	82	Adapter grind adjustment KE 640 Vario service pack
243511	84	Knob grind adjustment lock KE 640 Vario
243512	85	Spring steel sheet Vario

SPARE PARTS LIST - KE 640 Vario 200-230V 50/60Hz

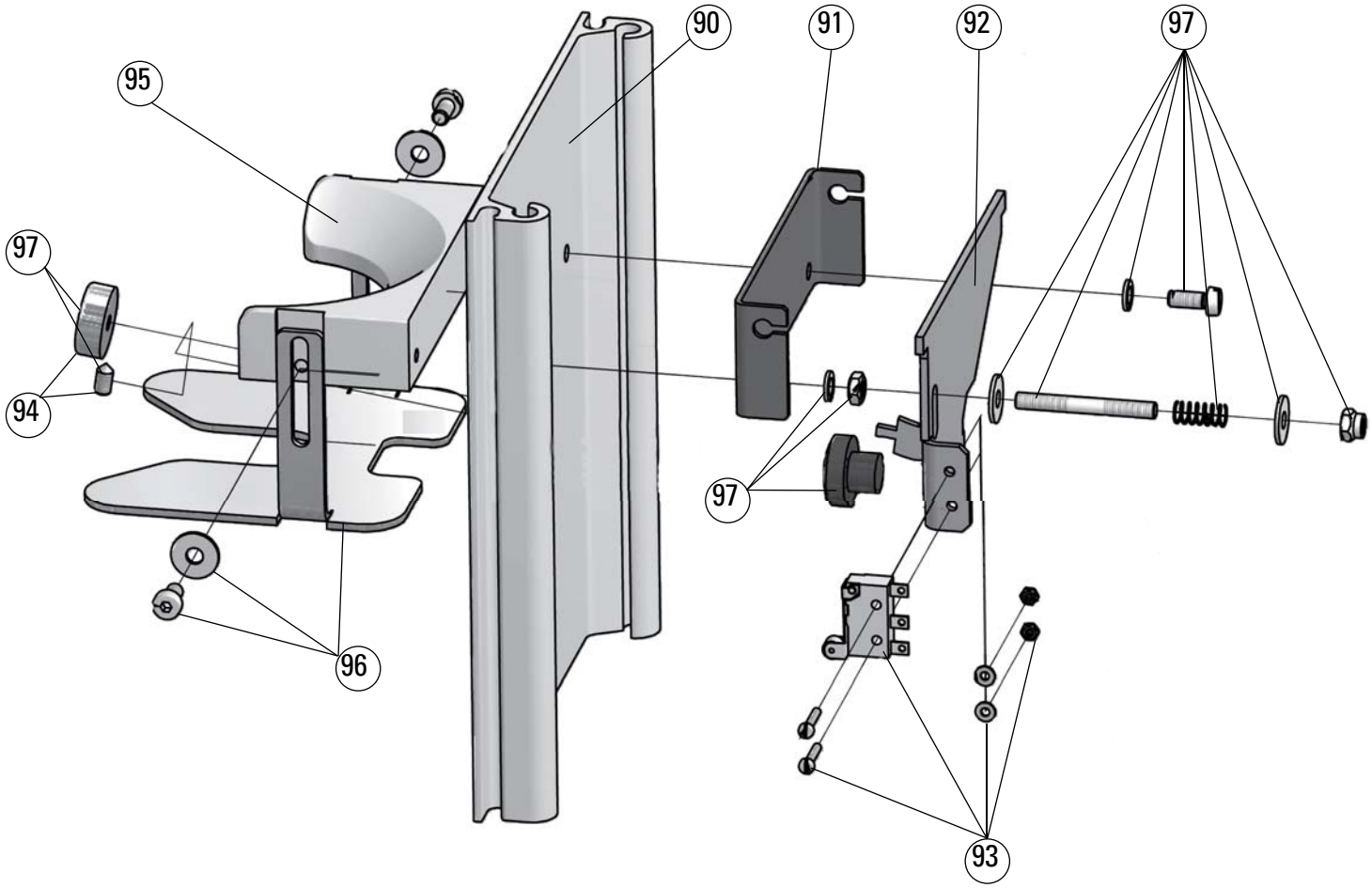

Model: KE 640 Vario 200-230V 50/60Hz

ARTICLE NO.	DRAWING NO.	DESCRIPTION
242511	90	Front plate machined and coated
242503	91	Rocker switch bent
242505	92	Rocker switch
243252	93	Micro switch, service pack
242365	94	Rocker switch knob, service pack
230455	95	Portafilter mounting machined and coated
243253	96	Portafilter rest - angular, service pack
243177	97	Small parts set, front panel KE 640

SPARE PARTS LIST - KE 640 Vario 200-230V 50/60Hz

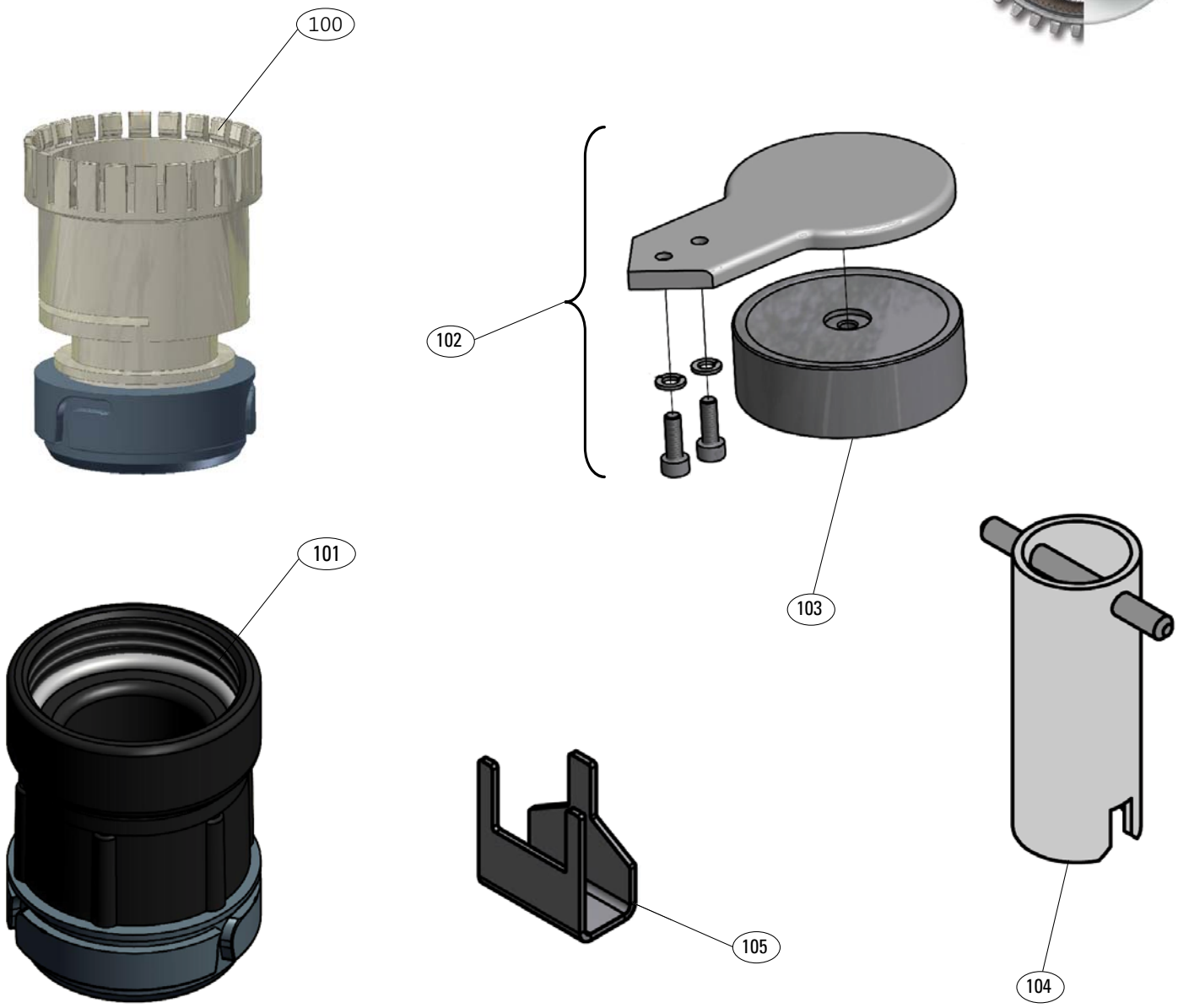

Model: KE 640 Vario 200-230V 50/60Hz

ARTICLE NO.	DRAWING NO.	DESCRIPTION
ADDITIONAL EQUIPMENT		
309466	100	Clamping adapter for can necks 67,4 - 67,8mm
100491	101	Threaded adapter for Illy cans (360° alignment of can) Tamper mounting kit d=53mm KE 640 complete
243500	(102)	Tamper mounting kit d=53mm KE 640 complete
243417	(102)	Tamper mounting kit d=55mm KE 640 complete
243573	(102)	Tamper mounting kit d=57mm KE 640 complete
242537	102	Tamper mounting kit d=58mm KE 640 complete
242374	(103)	Tamper insert d=53mm for static tamper
242375	(103)	Tamper insert d=55mm for static tamper
243576	(103)	Tamper insert d=57mm for static tamper
242376	103	Tamper insert d=58mm for static tamper
230546	104	Grind adjustment key KE 640
101066	105	Tool for disc change KE 640

Changes In The Spare Parts List:

VALID FROM SERIAL NO.	ARTICLE NO.	DRAWING NO.	DESCRIPTION	COMMENT
3.4	242549 243498+99	6 & 7	Lid for hopper Hopper without lid (with logo and without logo)	Only available as a set: Hopper + lid
3.4	243508	80	Cover grind adjustment	Only available compl. mounted
3.4	-	100-104	Hopper adapters, Tampers, Grind adjustment key	New in spare parts list
3.5	101147	11	EK11b built-in grinder 200-230V (C0212.00) KE640 silicone flapper (from ser.no. 3332)	New in spare parts list
3.5	267606	11	EK11b built-in grinder 200-230V (C0212.00) KE640 steel flapper (only ser.nos. 515655 - 523568)	New in spare parts list
3.5	101145	31	Grinder casing set EK11b, silicon flapper, brass thread	New in spare parts list
3.5	243555	31	Grinder casing set EK11b, steel flapper, brass thread (only ser.nos. 515655 - 523568)	New in spare parts list
3.5	100584	36	Steel flapper Ø15,8mm (ser.no. 515655-523568 only)	New in spare parts list
3.5	101518	36	Silicone flapper Ø15,8mm (exchange for steel flapper only! Serial.no. 515655-523568 only)	New in spare parts list
3.5	101066	105	Tool for disc change in EK11b	New in spare parts list
3.6	275123	32	Grinding disc set 65mm, KE640	New part number